SOW Annexure A - eTools Services Background

1. eTools Overview

1.1. The eTools application suite consists of three sub-applications that share a code-base, My Account Management Online (MAMO), the Defence Account Retirement Service (DARS) and Defence Enterprise Administrator (DEA). These applications have been developed and maintained internally within Defence by APS and above-the-line contractors beginning since 2005 with DEA v1.

1.2. DEA is a locally-deployed application/client first developed in 2005 (eTools v1) providing a front end for users to administer Active Directory and Exchange, reducing the requirement for direct/manual changes. DEA remains a VB6 application.

1.3. In 2016 MAMO went live as part of the eTools v2 update, which also updated DEA to v2. Replacing the previous eTools account request interface with the re-branded and heavily updated MAMO v2. MAMO allowed users to submit requests for network account creation, offboarding and management, and processed those requests automatically.

1.4. MAMO consists of a user-facing .NET and Blazor web app, application services that process requests written in C# utilising a SQL database.

1.5. DARS is an automated batch process service that identifies, disables and deletes standard network accounts that do not comply with ICT security policy (represented as a set of configurable variables). DARS went live in production in ~May 2023 and is written in VB6.

1.6. eTools v3 development began in late 2022. The goal of v3 was to modernise the eTools code base, move to a microservices architecture and later also to ensure compatibiltiy with supported software frameworks, such as .NET. Approximately 80% of MAMO DPE has been migrated to and is currently running v3, with just the v2 MAMO task processor and one other service still operating under the v2 code, awaiting development and migration to v3. MAMO DSE remains on v2 with intent to migrate to v3. DARS and DEA are also still using the v2 codebase, with intent to migrate to v3 and consolidating to a single codebase across all eTools applications and domains.

1.7. As indicated in the below high level architectural diagrams, eTools applications draw heavily upon DDM data sources, and in some cases populate and update those data sources, typically via stored procedures. Note the term CDMC in the diagrams refers to Certificate and Directory Management Centre, the directorate that was previously responsible for operating DDM. CDMC that operated DDM, and the previously separate directorate that developed and operated eTools, were merged together to become the Directorate of Digital Identity Services, now responsible for both eTools and DDM. Therefore, CDMC in these diagrams can be read as DDM, referring to various different DDM services/functions.

1.8. eTools has undergone consistent development and enhancement over the years to meet urgent business and security needs. As a result, not all of the supporting documentation been maintained to industry standards. There will be instances where eTools documentation is not in full alignment with the application and code base which will require remediation when identified during software development lifecycle.

1.9. eTools (MAMO, DARS and DEA) is present in the following Defence domains:

(a) DSE – Production domain users

(b) DPE – Production domain users and Pre-Prod test environment

(c) DPESIT – Non-integrated test environment, not used

(d) Local workstations – Development

1.10. eTools interfaces with a number of external extant Defence systems and assets including:

(a) Token Management System (TMS - Jellyfish) – for data on and deprovisioning access card logical access

(b) Personnel Access Control System (PACS - Gallagher) – for data on and deprovisioning access card physical access

(c) Objective – for Objective account de/provisonining/updates

(d) Active Directory – for account de/provisioning/updates

(e) Exchange – for account and mailbox de/provisioning/updates

(f) DDM – for Other Defence Support, PMKeyS, MyClearance and other data used in account de/provisioning/updates

(g) SMTP – for sending MAMO and DARS emails to users

1.11. Below is an approximation of statistics over 12 months for sustainment activities for DPE:

Total users	~100,000+
Service Requests	722
Incidents	1275
Problems	2
Changes	14
Change tasks	20

1.12. Below is an approximation of statistics over 12 months for sustainment activities for DSE:

Total users	~50,000
Service Requests	10
Incidents	120
Problems	1
Changes	3
Change tasks	2

1.13. MAMO has been developed with redundant infrastructure and services in mind, DEA is a locally hosted client application, and DARS is a batch application service. As a result of these factors and despite eTools importance to the Defence enterprise, eTools has not had any Priority 1 or 2 incidents/unplanned outages in the past year, nor any instances of needing to attend on-site after hours.

1.14. eTools is categorised as a Service Class 3 application supported by CP as per the below agreed support timeframes:

Item	SC3
Support Hours	24x7x365
Availability	99%
Operational Recovery Time Objective (ORTO)	< 24 Hours
Operational Recovery Point Objective (ORPO)	< 10 Minutes
Mean Time To Restore Service (MTRS)	< 88 Hours
Mean Time Between Failures (MTBF)	8,760 Hours
System Maintenance	N, N-1 Release Latest Patches
DR Time Objective	< 48 Hours

1.15. eTools support services are provided by the eTools sutainment team (being procured under this approach to market). Level 0 support is provided by MAMO help pages. Level 1 support is provided by the Defence ICT Service Desk. Level 2 and 3 eTools application support is provided by the eTools sustainment team. Infrastructure support for eTools is provided under other service towers/teams/contracts. Level 4 support for eTools software/frameworks is provided where applicable by the manufacturer, noting that as eTools is a group of bespoke applications created by Defence this is limited – for example contacting Microsoft for .NET or SQL support.

2. My Account Management Online (MAMO) Overview

2.1. As MAMO fulfils requests on behalf of end users, the system has been designed predominantly around Microsoft architectures.

2.2. The application stack can be broken up into 3 distinct components:

(a) MAMO Web Service: The MAMO web service provides the user-centric interface for Defence employees to request the various MAMO services. The web service is a standard .NET web app using ASP.NET and Blazor and hosted on a Windows IIS server.

(b) MAMO Application Services: When a MAMO request is submitted through the web service, the work is assigned to one of the 9 MAMO Application Service servers. These servers will then process the request and send the relevant notification (if required) to the end user once completed. These servers work in a high availability manner, if a server is unavailable or unable to complete a request, the request will move to the next available server. The MAMO Application services are written in C#, and hosted on Windows Server 2016.

(c) MAMO Database: The MAMO database stores information about submitted requests, their status within the MAMO processing queue and other information required for auditing purposes. The MAMO database runs on SQL Server 2017.

2.3. A list of the MAMO Production infrastructure can be found below:

Function	Software	Server/Hardware
MAMO Web Service	.NET Web-app	1x Window Server 2016
MAMO Application Servers	C# Application	9x Windows Server 2016
MAMO Database Server	SQL Server 2017	1x Windows Server 2016

2.4. Due to the complexity of the Defence environment, along with mandated security and process requirements, there are currently no commercial off-the-shelf products available that can perform all of the tasks associated with the eTools suite of requirements. Defence has investigated several alternative commercial solutions, but all would have required significant customisation and none could guarantee that all of the automated functionality that Defence required could be implemented.

2.5. eTools v2 has implemented all of Defence's stringent security requirements to ensure that the integrity of the Defence Information Environment is maintained. The security requirements included in eTools v2 are:

(a) Strong database connection strings with encryption in a secure location

(b) The implementation of appropriate identities such as Active Directory logon and SQL permissions for access

(c) Securing data that flows across the network using Secure Sockets Layer (SSL)

(d) Compliance with Defence security standards in addition to the use of Integrated Windows Authentication when utilising Internet Information Service (IIS)

2.6. MAMO is currently maintained using either Visual Studio 2017 or JetBrains Rider with Visual Studio Team Foundation Server 2015. Dynatrace monitoring has recently been implemented to assist the sustainment team in supporting etools, allow enhanced performance monitoring etc.

2.7. Below is an overview of key eTools (currently only MAMO) v3 migration design principles:

(a) **Frontend Blazor service:** The front end service for the new v3 redesign is modular in nature and uses cshtml. It utilises a pattern called "components", which enables developers to write once and reuse later. This allows developers to quickly input data into a component, and have it self-render to the user, rather than pre-establishing the title of every grid, what columns it has, what cells are displayed etc.The use of components enables extra hand-holding through forms via real-time validation of the data prior to submission. This reduces user error and allows a streamlined informative journey for change modify requests as well as immediate requests.

(b) **Authentication Middleware:** The authentication middleware automatically detects, decodes, verifies and applies claims principals when using the MAMO service. This verifies the JSON Web Token, confirming that it exists, is valid and was created on the current domain with valid signing keys. It then queries the user profile in the eTools database and confirms the applied roles are active, before applying permission nodes as required.This session is then reused while the user persists a signalR connection, allowing them to browse restricted areas of the application without having to re-verify the token for a set period.

(c) **Unit of work repositories:** Data connections are simplified using the entity framework and the unit of work design pattern. Entities are realised as database entities, and are a direct reflection in code. They are also domain specific, and persist in their respective domain inside the code base. Linq to Db and Linq to entities interfaces are strictly enforced. Strict entity and context separation is enforced, preventing contamination of entity contexts and query segregation. Data connections are Asynchronous providing execution context on multiple databases in parallel. Modular connection design concepts are applied allowing resusability across multple functional silos and external projects.

(d) **Linq to LDAP:** Significant changes have been applied in the LDAP protocol space to conform to modern programming practices. As part of this work, compilers have been made that allow the abstraction of LDAP queries into a fluent styling.

(e) **Dynamic Expressions:** For modern day data querying requiring the ability to dynamically filter data extemporaneously eTools leverages expressions and functional predicates applying them to data sources. This requires JIT compiling user parameters from data grid states into functional methods, using a series of linq expressions. The result is a completely dynamic grid with pagination, filterability per column, multi sorting and global variable filtering. This greatly increases the filterability of data states for the users, allowing them to quickly navigate and search for the data that they require.

(f) **API Integration:** The v3 solution has been designed with security as the primary imperative. Defence applications require strict levels of identity data. eTools v3 has been built with a particular focus on REST API methods for all integrations. This API design allows future projects to communicate via managed, audited, governed API methods providing secure and reliable data flow.

2.8. During peak periods, MAMO can have up to ~90,000 unique users a month, equating to approximately ~50,000,000 pages loaded and ~40,000 requests.

2.9. MAMO functions/requests include the following:

(a) Create a network account

(b) Move a network account

(c) Request application access

(d) Request Everybody Database (EBDB) access

(e) Request a temporary MFA exclusion

(f) Extended Leave (temporary network account suspension)

(g) Create an Other Defence Support (ODS) record

(h) Renew an ODS record expiry date

(i) Update ODS record details

(j) Leaving Defence requests – ODS, APS or ADF

(k) Create a resource mailbox

(l) Manage a resource mailbox

(m) Delete a resource mailbox

(n) Pending approvals and current/previous requests

(o) Help pages

(p) Self-service reporting functionality on different types of requests

(q) Various network security functions for ICT Security

(r) Service Desk verification function

(s) MAMO/DEA role management

(t) Administrative functions for MAMO administrators

(u) Other functions.

2.10. MAMO primary end users are supervisors and contract managers for staff onboarding and offboarding, and all staff with Defence network access to manage their account. Other key MAMO users are:

(a) The ICT Service Desk, for caller verification and troubleshooting assistance

(b) ICT Security, for approval of some types of requests and other functions

(c) Reporting stakeholders –stakeholders across Defence consume MAMO reporting, in particular leaving-request data to inform their own off-boarding activities

(d) DDIS MAMO administrators, for administration and troubleshooting.

2.11. Below are diagrams showing high-level process workflow for requests and system architecture.

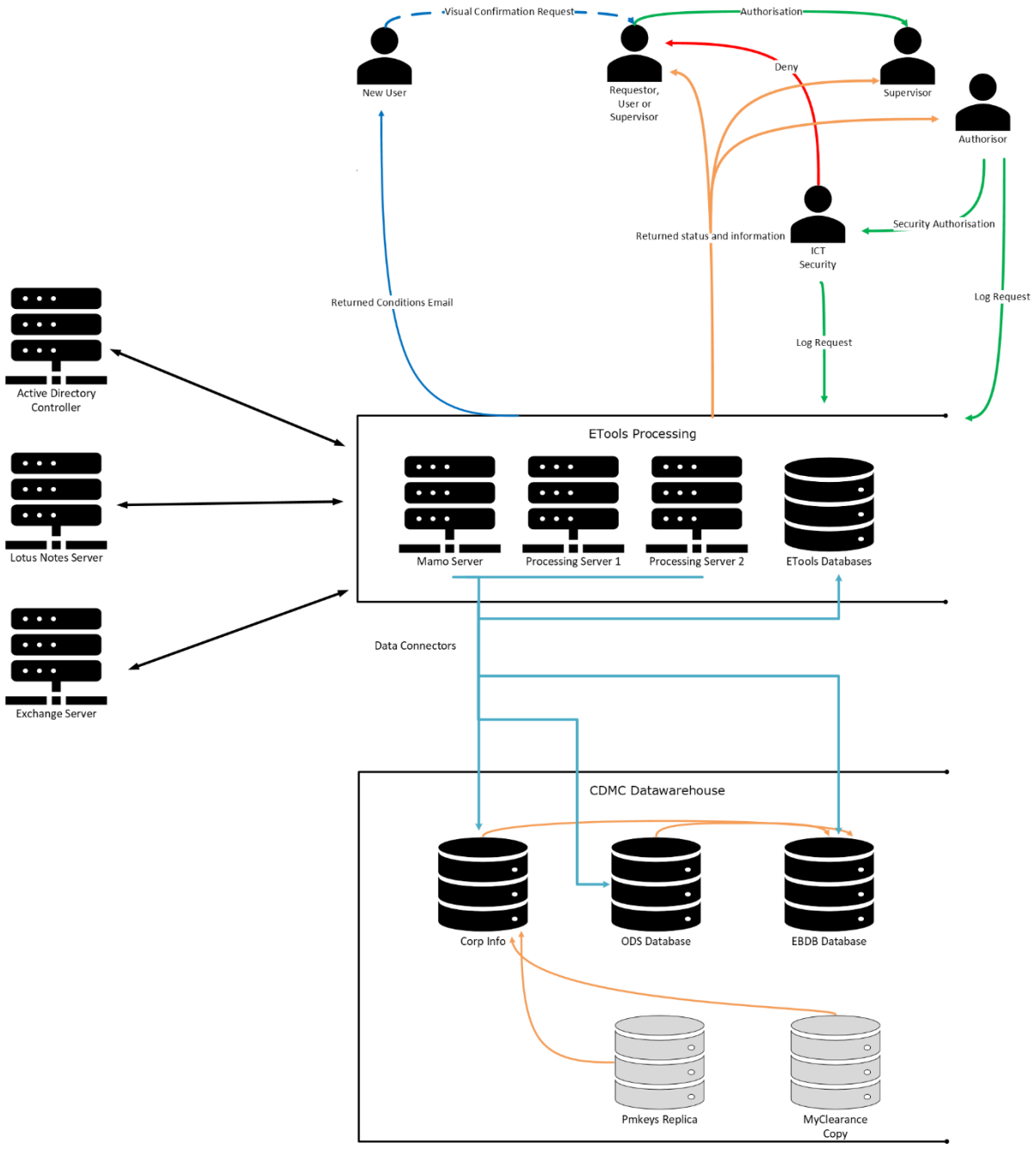
Visual Confirmation Request
Authorisation
New User
Requestor, User or Supervisor
Deny
Supervisor
Authorisor
Security Authorisation
Returned status and information
ICT Security
Returned Conditions Email
Log Request
Log Request
Active Directory Controller
Lotus Notes Server
Exchange Server
ETools Processing
Mamo Server
Processing Server 1
Processing Server 2
ETools Databases
Data Connectors
CDMC Datawarehouse
Corp Info
ODS Database
EBDB Database
Pmkeys Replica
MyClearance Copy

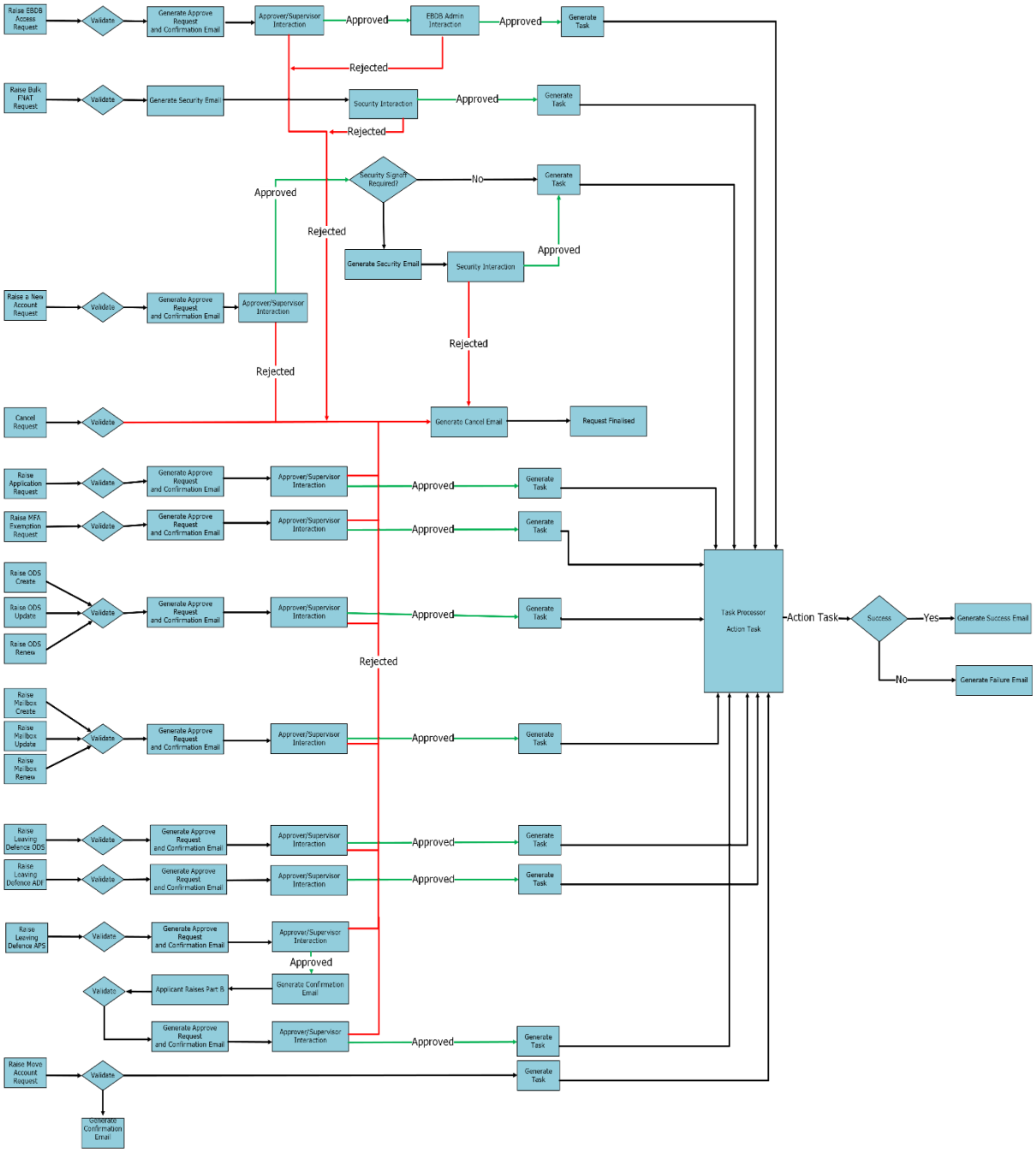
Raise EBDB Access Request
Validate
Generate Approve Request and Confirmation Email
Approver/Supervisor Interaction
Approved
EBDB Admin Interaction
Approved
Generate Task
Rejected
Raise Bulk FNAT Request
Validate
Generate Security Email
Security Interaction
Approved
Generate Task
Rejected
Security Signoff Required?
No
Generate Task
Approved
Rejected
Generate Security Email
Security Interaction
Approved
Raise a New Account Request
Validate
Generate Approve Request and Confirmation Email
Approver/Supervisor Interaction
Rejected
Rejected
Cancel Request
Validate
Generate Cancel Email
Request Finalised
Raise Application Request
Validate
Generate Approve Request and Confirmation Email
Approver/Supervisor Interaction
Approved
Generate Task
Raise MFA Exemption Request
Validate
Generate Approve Request and Confirmation Email
Approver/Supervisor Interaction
Approved
Generate Task
Raise ODS Create
Raise ODS Update
Raise ODS Renew
Validate
Generate Approve Request and Confirmation Email
Approver/Supervisor Interaction
Approved
Generate Task
Rejected
Task Processor
Action Task
Action Task
Success
Yes
Generate Success Email
No
Generate Failure Email
Raise Mailbox Create
Raise Mailbox Update
Raise Mailbox Renew
Validate
Generate Approve Request and Confirmation Email
Approver/Supervisor Interaction
Approved
Generate Task
Raise Leaving Defence ODS
Validate
Generate Approve Request and Confirmation Email
Approver/Supervisor Interaction
Approved
Generate Task
Raise Leaving Defence ADF
Validate
Generate Approve Request and Confirmation Email
Approver/Supervisor Interaction
Approved
Generate Task
Raise Leaving Defence APS
Validate
Generate Approve Request and Confirmation Email
Approver/Supervisor Interaction
Approved
Generate Confirmation Email
Applicant Raises Part B
Validate
Generate Approve Request and Confirmation Email
Approver/Supervisor Interaction
Approved
Generate Task
Raise Move Account Request
Validate
Generate Task
Generate Confirmation Email

Defence Enterprise Administrator (DEA) Overview

2.12. DEA is a custom application designed specifically to manage the Defence Active Directory and Exchange environment for both the Protected and Secret domains.

2.13. DEA is one of three distinct applications developed for the eTools suite of products. Written in Visual Basic 6, DEA is currently considered a legacy design with the possibility of being uplifted to a modern web based capability in future.

2.14. The DEA application provides extended, comprehensive attribute and account system administrative functions through a single locally hosted front end user interface application.

2.15. DEA interacts with a number of corporate data sources and technology platforms providing, but not limited to, the following:

(a) AD objects managed with the same rules and configuration as the eTools MAMO product

(b) Email account management and administration

(c) Enforced administration in accordance with Defence policy

(d) AD objects to be centrally managed for multiple Exchange and Active Directory environments using a single interface

(e) Distribution List management and administration

(f) User, generic and shared mailbox account management and administration

(g) Querying EBDB, ODS, PMKeyS, DCD and myClearance data.

2.16. The DEA administrative interface is tightly coupled with the eTools framework and uses a variety of SQL configuration tables for operational purposes.

2.17. DEA user access is provisioned by team leaders with authorisation using the MAMO application. The DEA application is installed locally as a client application packaged through Defence's SOE Software Centre service.

2.18. There are approximately 300 unique DEA users, performing approximately 500,000 transactions per year. DEA users are split across various teams including the ICT Service Desk, ICT Cyber Security teams, the Central Processing COE Exchange and Active Directory teams, the Fleet Information Systems Support Office and the eTools and DDM Sustainment teams.

2.19. DEA has not been significantly updated in several years, other than for packaging changes to ensure ongoing Windows SOE compatibility (as a locally hosted client application). Due to its age DEA may require uplifting to a more modern user centric design for any significant changes, while continuing to follow eTools v3 design principles.

2.20. The diagram below outlines the high level DEA architecture:

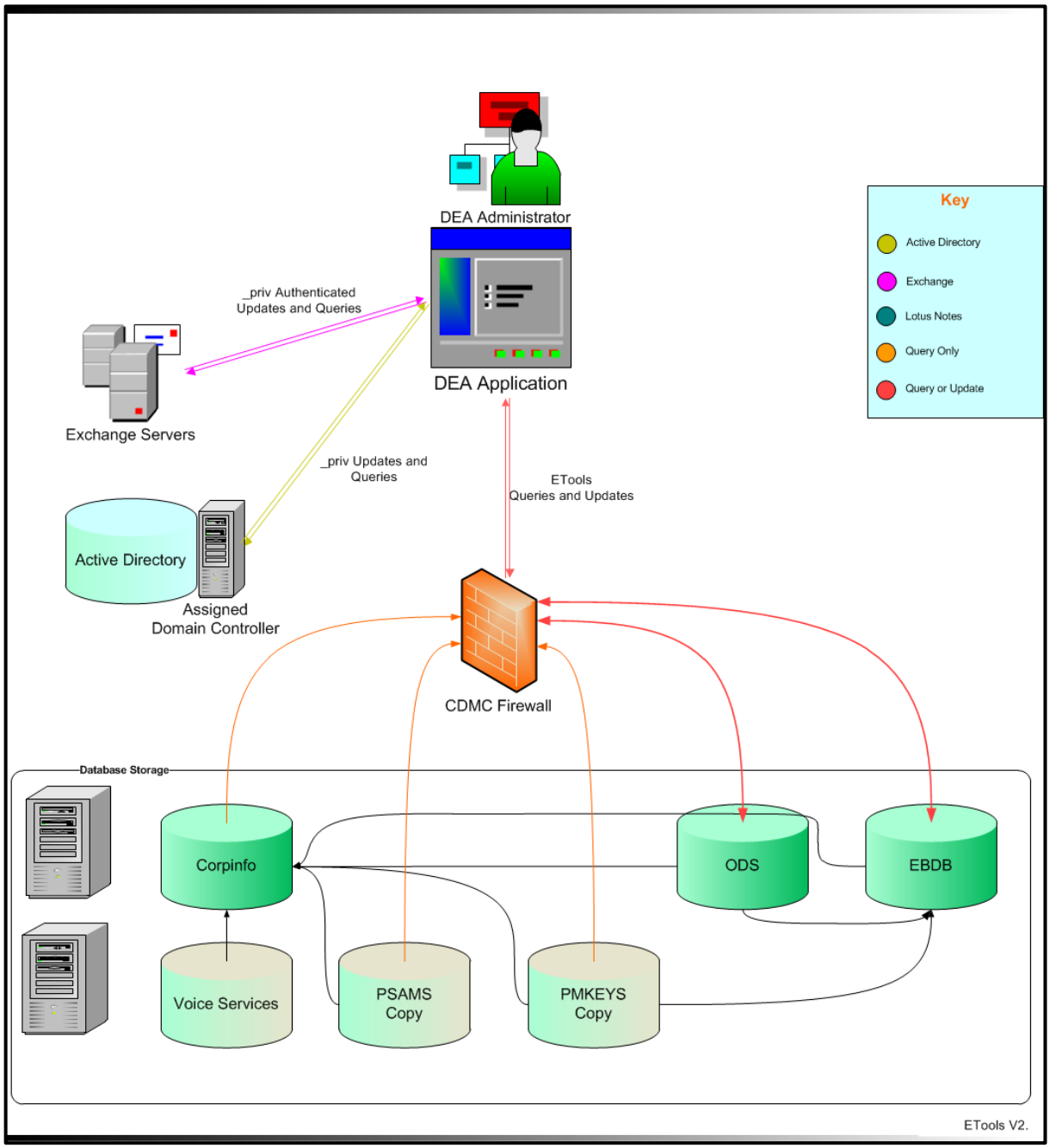
DEA Administrator
DEA Application
Key
Active Directory
Exchange
Lotus Notes
Query Only
Query or Update
_priv Authenticated
Updates and Queries
Exchange Servers
_priv Updates and
Queries
ETools
Queries and Updates
Active Directory
Assigned
Domain Controller
CDMC Firewall
Database Storage
Corpinfo
ODS
EBDB
Voice Services
PSAMS
Copy
PMKEYS
Copy
ETools V2.

3. Defence Account Retirement Service (DARS) Overview

3.1. DARS is a batch application that runs as an installed windows service. It is triggered by Windows System Scheduler to run at configured times and dates, with a typical processing time of about 8 hours. DARS currently runs as a single threaded application due to how contexts must stay open with certain data sources that do not allow multiple threaded contexts or Asynchronous communication.

3.2. DARS performs several different actions including:

(a) deletes accounts as the culmination of successful MAMO leaving requests

(b) sends email warnings to supervisors and holders of accounts that are at risk of becoming non-compliant

(c) disables non-compliant accounts, and

(d) eventually deletes accounts that continue to be non-complaint.

3.3. The variables that determine account non-compliance, as well as when the resulting actions are due to occur, are all configurable.

3.4. DARS disables approximately 3000 accounts per month and deletes approximately 1800 accounts per month (including routine offboards as a result of a MAMO leaving request). DARS processes many more records than this daily, as there are many accounts that are at risk of becoming non-compliant, are sent email warnings by DARS, but then have their reasons for non-compliance resolved and therefore do not end up being disabled or deleted.

3.5. Although DARS is not an accessible application with end-users like MAMO or DEA, it is an important component in Defence's security-in-depth layered approach, greatly reducing trusted insider risk and Defence's threat surface.

3.6. DARS retrieves 'target' account data via SQL from the MAMO database for accounts due to be deleted as a result of leaving requests, then scans AD for accounts meeting the retirement rules. DARS then generates email warnings or in serious cases, disables and schedules the accounts and access for removal.

3.7. To determine whether an account is non-compliant and requiring action DARS communicates with Defence's Active Directory forest, scanning all active AD controllers to find the absolute source of truth for a user's activity on the network. This communication is done via LDAP, and is queried via transpiled and optimised C# mappings to dynamic LDAP. DARS also checks HR systems like the other defence staff data sources, PMKeyS and Everybody Database. This is done via DDM populating staging tables for DARS to review containing relevant HR, security clearance and other types of data.

3.8. The DARS Assembly is written in VB.NET targeting VB Version 6. DARS also utilises C# assemblies and libraries written and targeted for legacy .NET versions. This code is compiled from modular libraries and binaries from the eTools stack, which has been cross compiled over to .NET standard interop with VB. DARS uses transitive packages and assemblies from various NuGet sources.

3.9. Below are high level architecutre diagrams for DARS.

eTools DARS Database Communications.

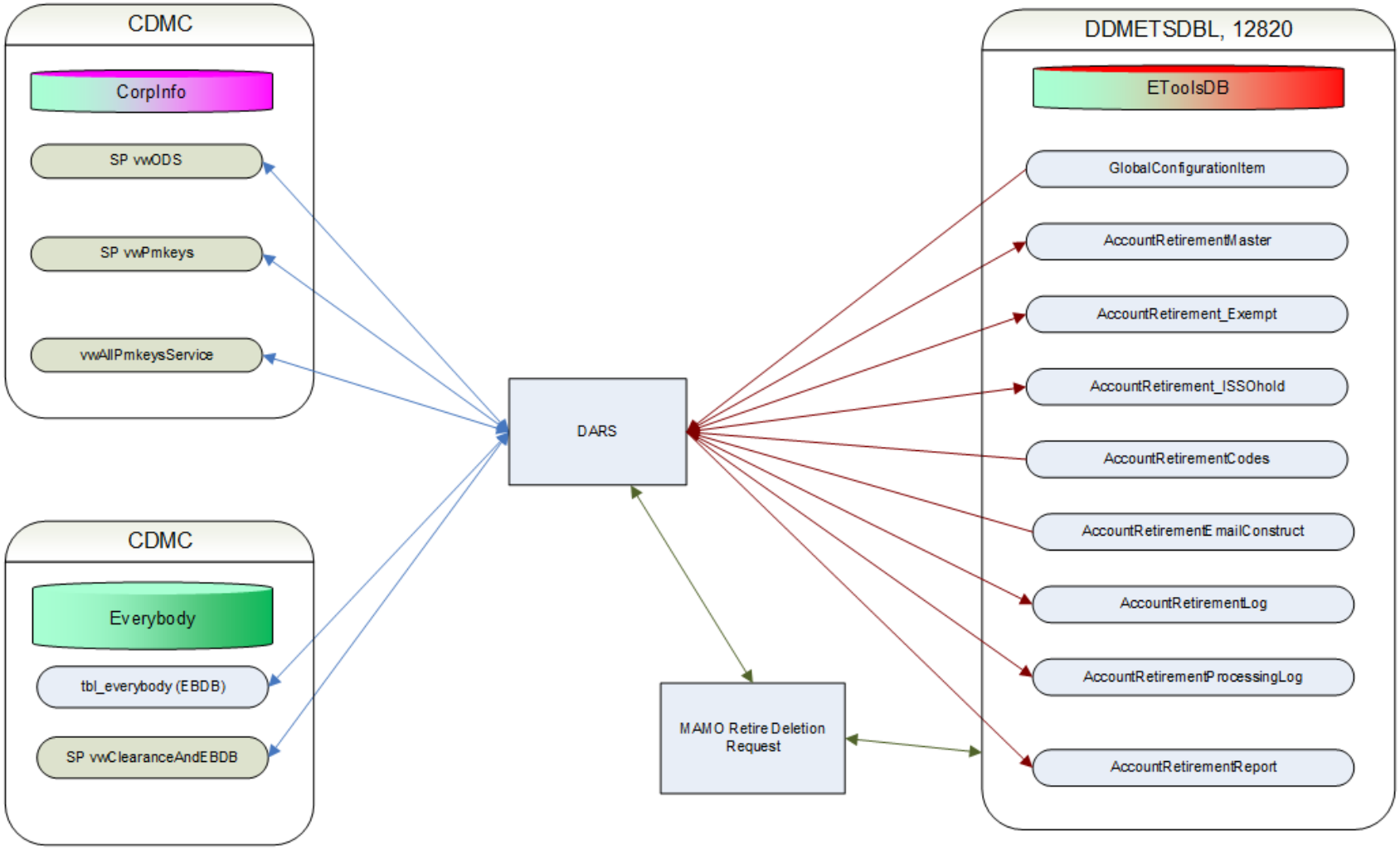

The DARS Staging table is built using DDM (CDMC) stored procedures from an import of AD combined with their source data tables. The workflow and integration of the staging table in to DARS is shown below.

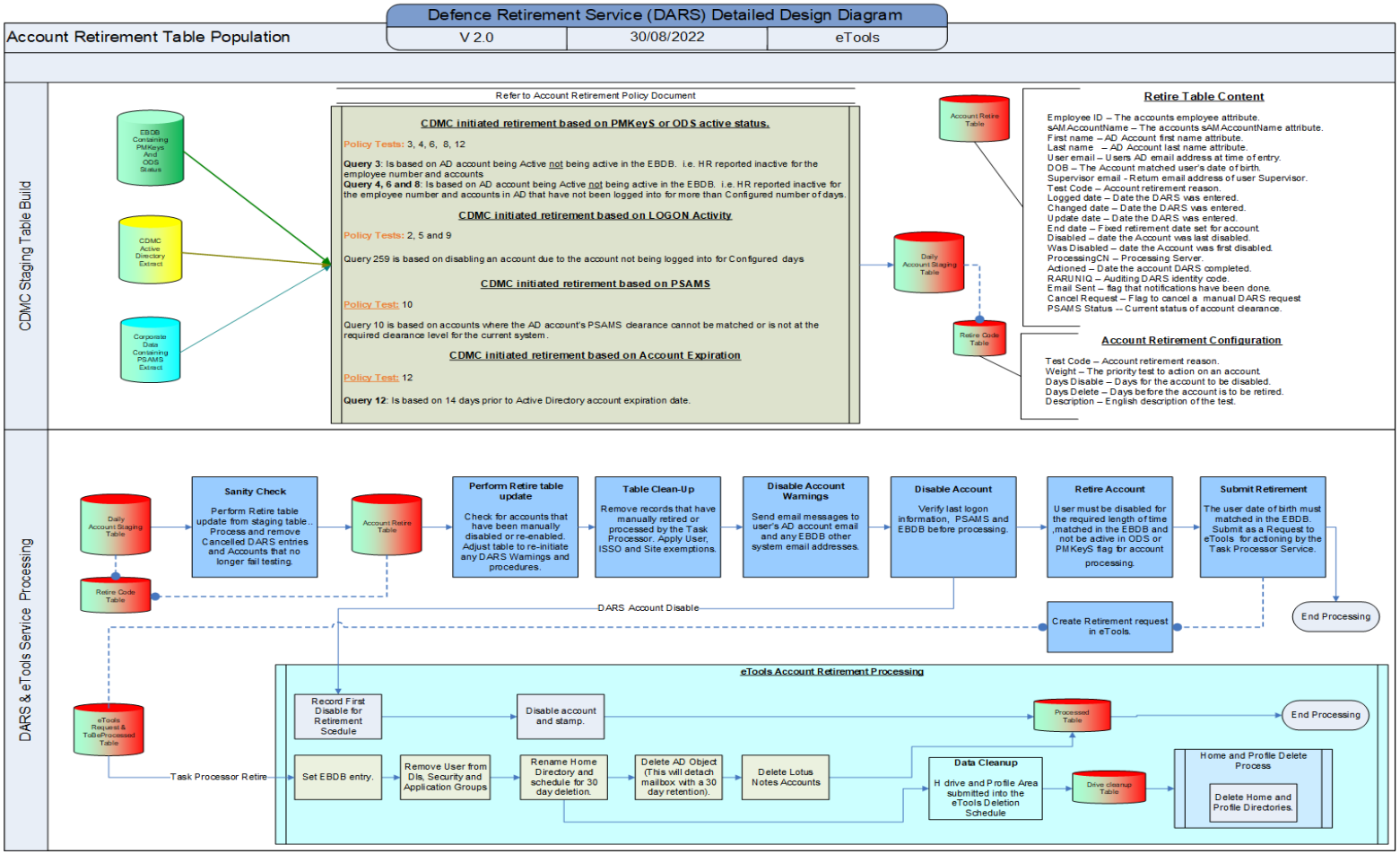

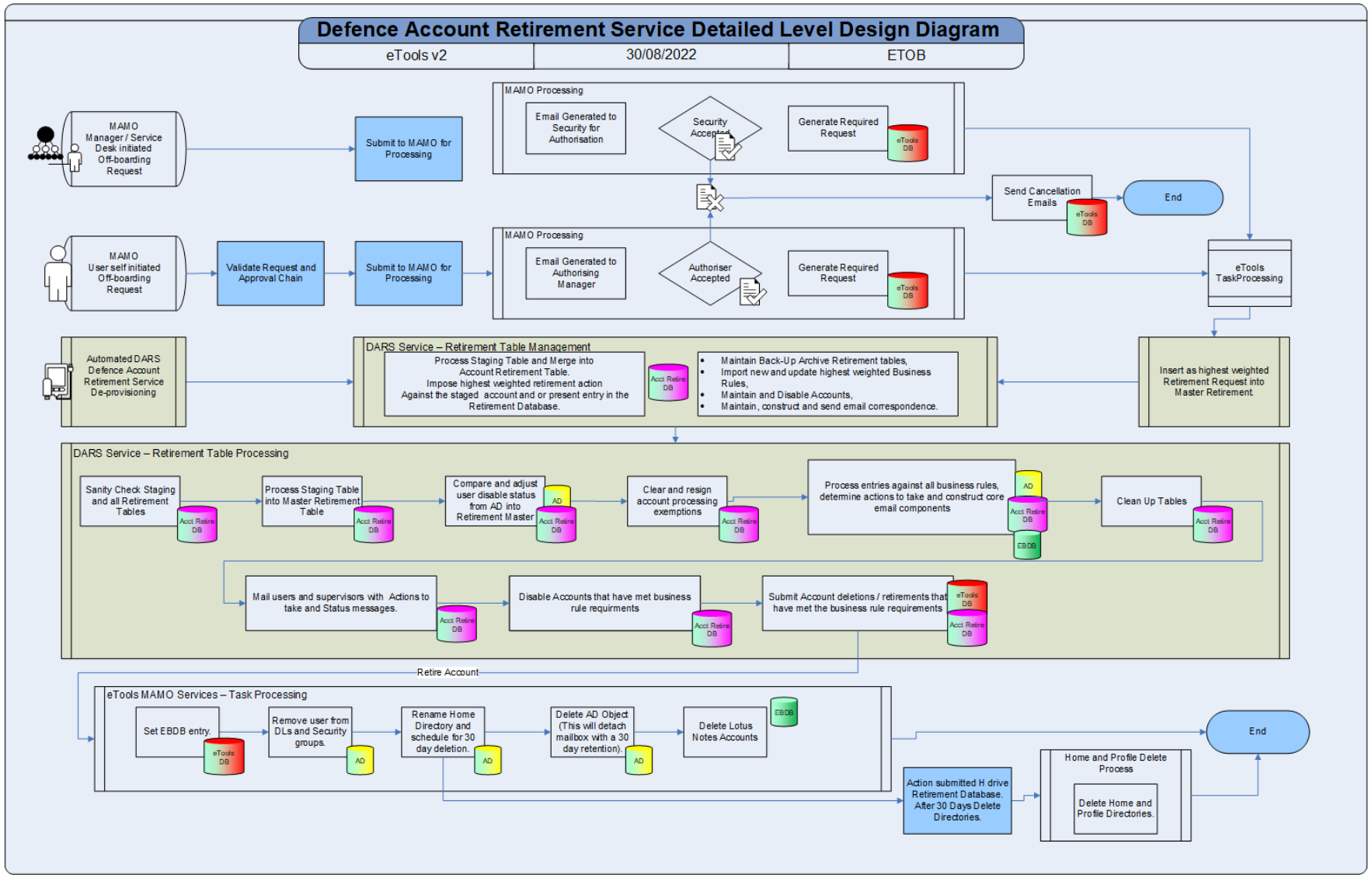
Defence Account Retirement Service Detailed Level Design Diagram
eTools v2
30/08/2022
ETOB
MAMO Manager / Service Desk initiated Off-boarding Request
Submit to MAMO for Processing
MAMO Processing
Email Generated to Security for Authorisation
Security Accepted
Generate Required Request
eTools DB
Send Cancellation Emails
End
MAMO User self initiated Off-boarding Request
Validate Request and Approval Chain
Submit to MAMO for Processing
MAMO Processing
Email Generated to Authorising Manager
Authoriser Accepted
Generate Required Request
eTools DB
eTools TaskProcessing
Automated DARS Defence Account Retirement Service De-provisioning
DARS Service – Retirement Table Management
Process Staging Table and Merge into Account Retirement Table. Impose highest weighted retirement action Against the staged account and or present entry in the Retirement Database.
Acct Retire DB
Maintain Back-Up Archive Retirement tables,
Import new and update highest weighted Business Rules,
Maintain and Disable Accounts,
Maintain, construct and send email correspondence.
Insert as highest weighted Retirement Request into Master Retirement
DARS Service – Retirement Table Processing
Sanity Check Staging and all Retirement Tables
Acct Retire DB
Process Staging Table into Master Retirement Table
Acct Retire DB
Compare and adjust user disable status from AD into Retirement Master
AD
Acct Retire DB
Clear and resign account processing exemptions
Acct Retire DB
Process entries against all business rules, determine actions to take and construct core email components
AD
Acct Retire DB
EBDB
Clean Up Tables
Acct Retire DB
Mail users and supervisors with Actions to take and Status messages.
Acct Retire DB
Disable Accounts that have met business rule requirments
Acct Retire DB
Submit Account deletions / retirements that have met the business rule requirements
eTools DB
Acct Retire DB
Retire Account
eTools MAMO Services – Task Processing
Set EBDB entry.
eTools DB
Remove user from DLs and Security groups.
AD
Rename Home Directory and schedule for 30 day deletion.
AD
Delete AD Object (This will detach mailbox with a 30 day retention).
AD
Delete Lotus Notes Accounts
EBDB
End
Action submitted H drive Retirement Database. After 30 Days Delete Directories.
Home and Profile Delete Process
Delete Home and Profile Directories.

END OF DOCUMENT